A1.1 **PORT LOCATION MAP**
SCALE 1NTS METERS

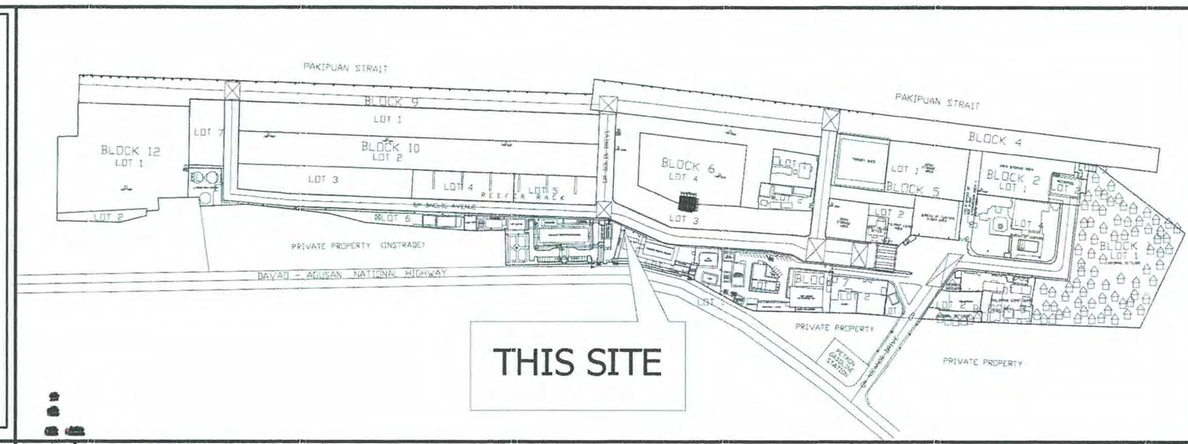

A1.2 **LOCATION PLAN**
SCALE 1NTS METERS

SHT. NO.	DESCRIPTION
A1	PORT LOCATION MAP, LOCATION PLAN, SHEET CONTENTS, SITE DEVELOPMENT PLAN, PERSPECTIVES
A2	PLAN (CW – 2), BLOW-UP PLAN (CW – 2) ROOF PLAN (CW – 2), NEW CONCRETE PEDESTAL – DETAIL
A3	REFLECTED CEILING PLAN (CW – 2), BLOW-UP PLAN (CW – 2), SECTION E-E (CW – 2), SECTION F-F (CW – 2), SPOT DETAIL
A4	BLOW-UP PLANS (CW – 2), SECTION A-A (CW – 2), SECTION B-B (CW – 2), COVERED WALKWAY – 2 UPPER COVER DETAIL
E1	LIGHTING LAYOUT (CW-2), LIGHT FIXTURE ATTACHMENT DETAIL

A1.3 **SHEET CONTENTS**
SCALE 1NTS METERS

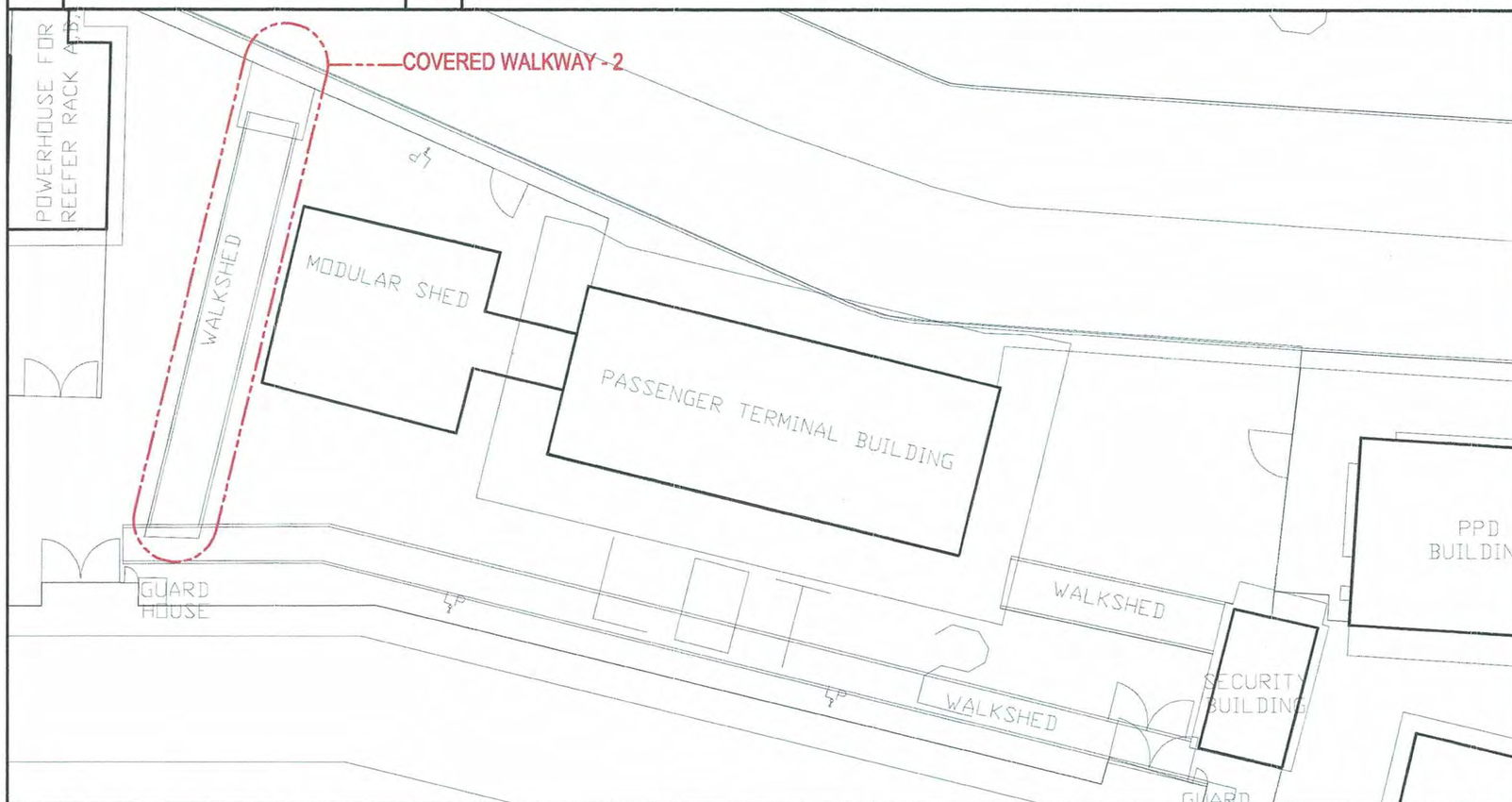

A1.4 **SITE DEVELOPMENT PLAN**
SCALE 1:400 METERS

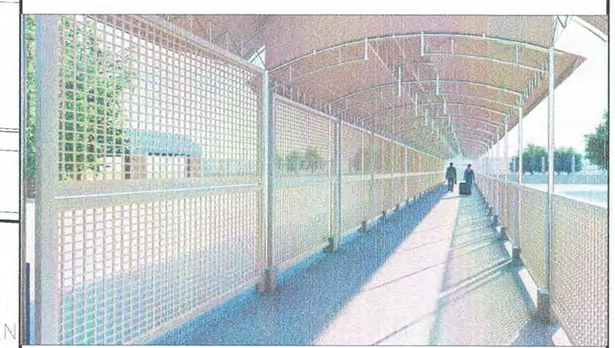

COVERED WALKWAY - 2

A1.5 **PERSPECTIVES**
SCALE 1NTS METERS

PHILIPPINE PORTS AUTHORITY
PMO DAVAO

PREPARED BY:	CHECKED AND REVIEWED BY:	RECOMMENDING APPROVAL BY:	APROVED BY:
KENNETH JOHN B. REMOLADOR ARCHITECT II	EDELPETER L. DE LA ROSA SUPERVISING ENGINEER	LARA SIMONE L. ABA ACTING ESD MANAGER	ANALEE G. AGUILA PORT MANAGER

OWNER: ANALEE G. AGUILA, PORT MANAGER

SHEET CONTENTS: PORT LOCATION MAP, LOCATION PLAN, SHEET CONTENTS, SITE DEVELOPMENT PLAN, PERSPECTIVE

PROJECT TITLE: MAINTENANCE OF COVERED WALKWAY – 2 AT PASSENGER TERMINAL BUILDING AT SASA PORT, DAVAO CITY

LOCATION: SASA PORT, KM. 10 PORT AREA, DAVAO CITY

REVISIONS	
DATE	REMARKS
ADDENDUM	
NO.	–
PROJECT	–
DATE	–
DRAWN	–

SHEET NO. A1 OF 4

CADD BY KJR
DATE DRAWN 1/12/26
DATE UPDATED MM/DD/YY

DRAWING AND SPECIFICATION DULY SIGNED, STAMPED OR SEALED AS INSTRUMENTS OF SERVICES ARE THE PROPERTY OF THE ARCHITECT, WHETHER THE OBJECTS FOR WHICH THEY ARE MADE IS EXECUTED OR NOT. IT SHALL BE UNLAWFUL FOR ANY PERSON WITHOUT THE WRITTEN CONSENT OF THE ARCHITECT OF THE SAID DOCUMENTS TO DUPLICATE OR TO MAKE COPIES OF THE SAID DOCUMENTS FOR USE IN REPETITION OF AND FOR PROJECTS OR BUILDINGS WHETHER PARTLY OR WHOLELY EXECUTED. R.A.545 SECTION 25(4).

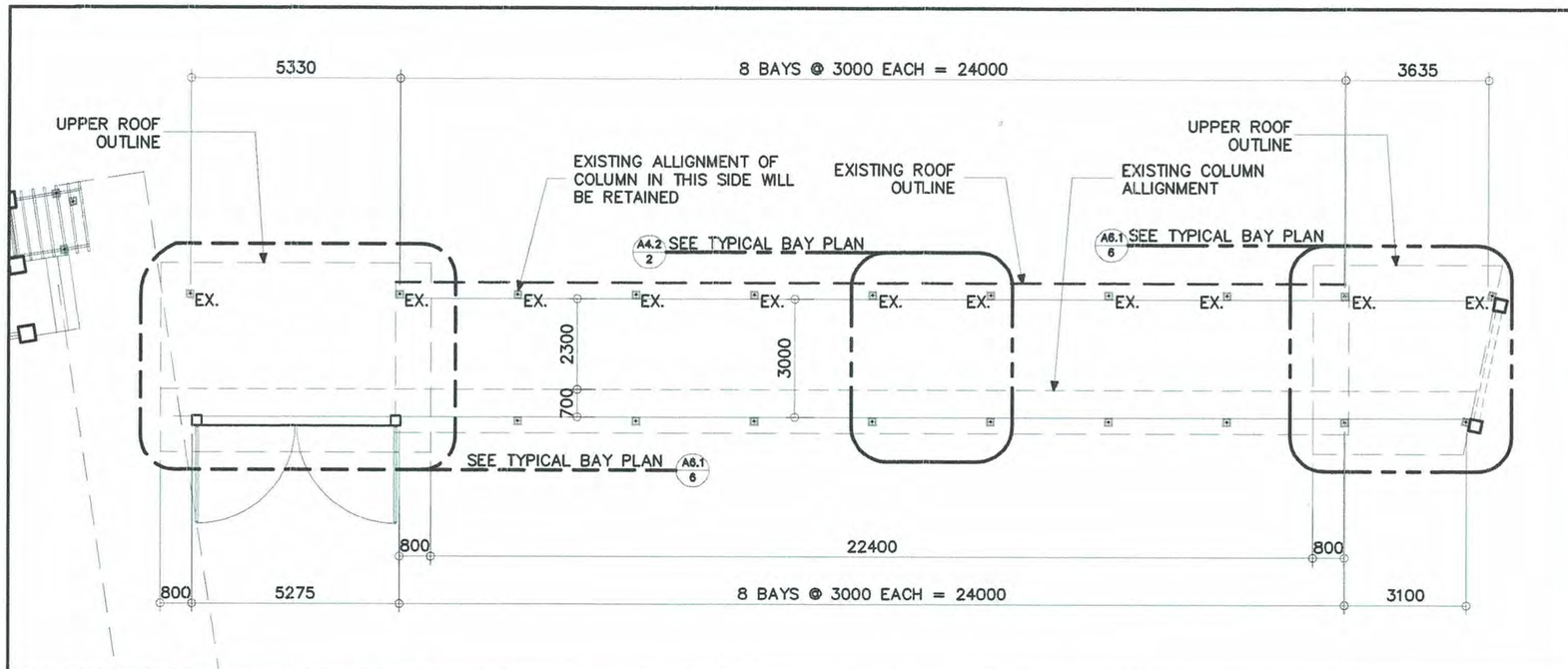

A2.1 PLAN (COVERED WALKWAY – 2)
SCALE 1:150 METERS

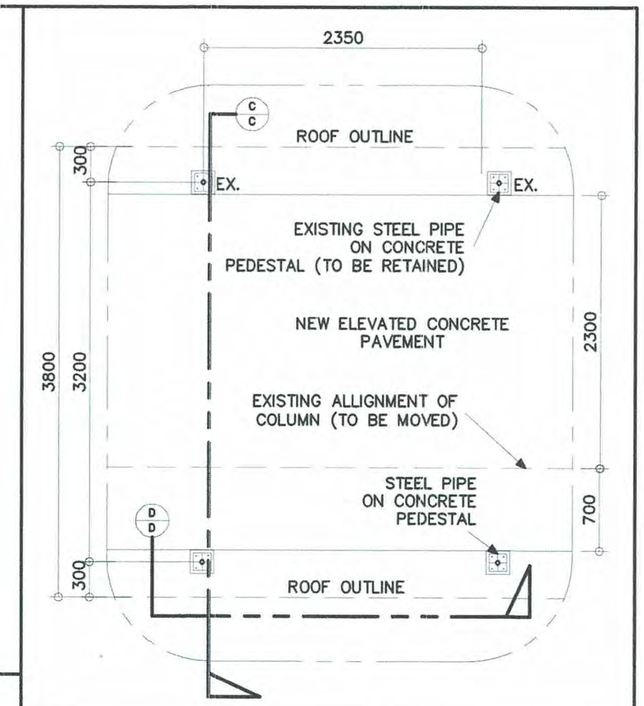

A2.2 BLOW-UP PLAN (COVERED WALKWAY – 2)
SCALE 1: 50 METERS

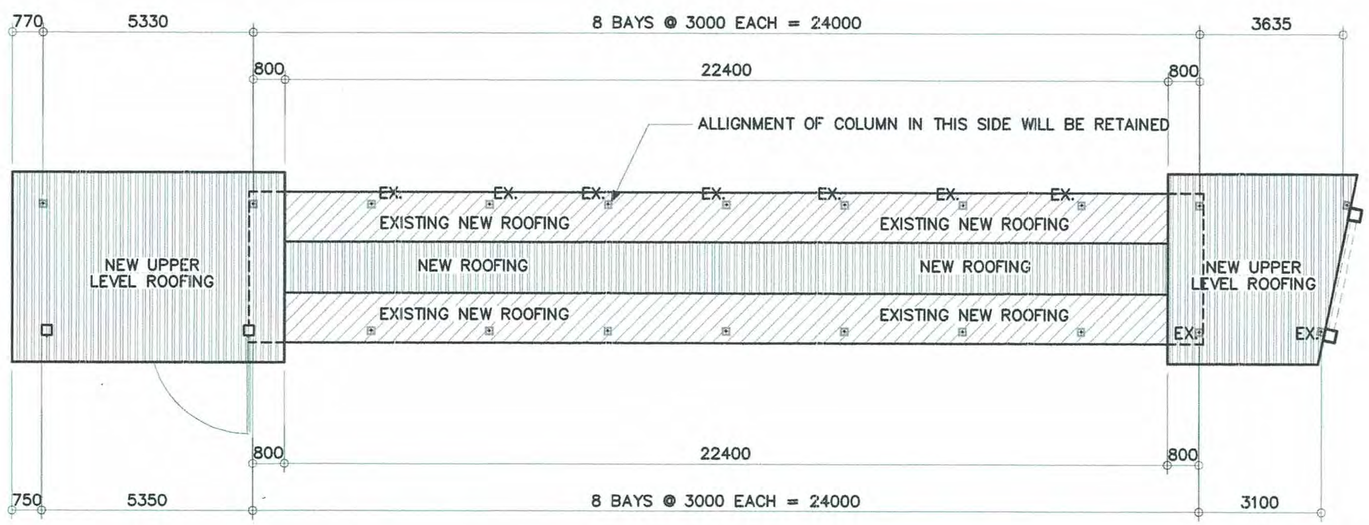

A2.3 ROOF PLAN (COVERED WALKWAY – 2)
SCALE 1: 40 METERS

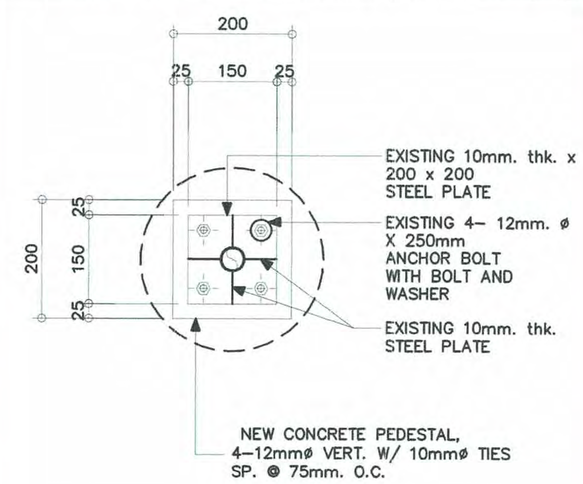

A2.4 NEW CONCRETE PEDESTAL – DETAIL
SCALE 1: 30 METERS

PHILIPPINE PORTS AUTHORITY PMO DAVAO

PREPARED BY:	CHECKED AND REVIEWED BY:	RECOMMENDING APPROVAL BY:	APROVED BY:
KENNETH JOHN B. REMOLADOR ARCHITECT II	EDELPETER L. DE LA ROSA SUPERVISING ENGINEER	LARA SIMONE L. ABA ACTING ESD MANAGER	ANALEE G. AGUILA PORT MANAGER

OWNER: ANALEE G. AGUILA, PORT MANAGER

SHEET CONTENTS: PLAN (CW – 2), BLOW-UP PLAN (CW – 2), ROOF PLAN (CW – 2), NEW CONCRETE PEDESTAL – DETAIL

PROJECT TITLE: MAINTENANCE OF COVERED WALKWAY – 2 AT PASSENGER TERMINAL BUILDING AT SASA PORT, DAVAO CITY

LOCATION: SASA PORT, Km. 10 PORT AREA, DAVAO CITY

REVISIONS	
DATE	REMARKS
ADDENDUM	
NO.	–
PROJECT	–
DATE	–
DRAWN	–

SHEET NO. A2 OF 4

CADD BY KJR
DATE DRAWN 1/12/26
DATE UPDATED MM/DD/YY

DRAWING AND SPECIFICATION DULY SIGNED, STAMPED OR SEALED AS INSTRUMENTS OF SERVICES ARE THE PROPERTY OF THE ARCHITECT, WHETHER THE OBJECTS FOR WHICH THEY ARE MADE IS EXECUTED OR NOT. IT SHALL BE UNLAWFUL FOR ANY PERSON WITHOUT THE WRITTEN CONSENT OF THE ARCHITECT OF THE SAID DOCUMENTS TO DUPLICATE OR TO MAKE COPIES OF THE SAID DOCUMENTS FOR USE IN REPETITION OF AND FOR PROJECTS OR BUILDINGS WHETHER PARTLY OR WHOLELY EXECUTED. R.A.545 SECTION 25(4).

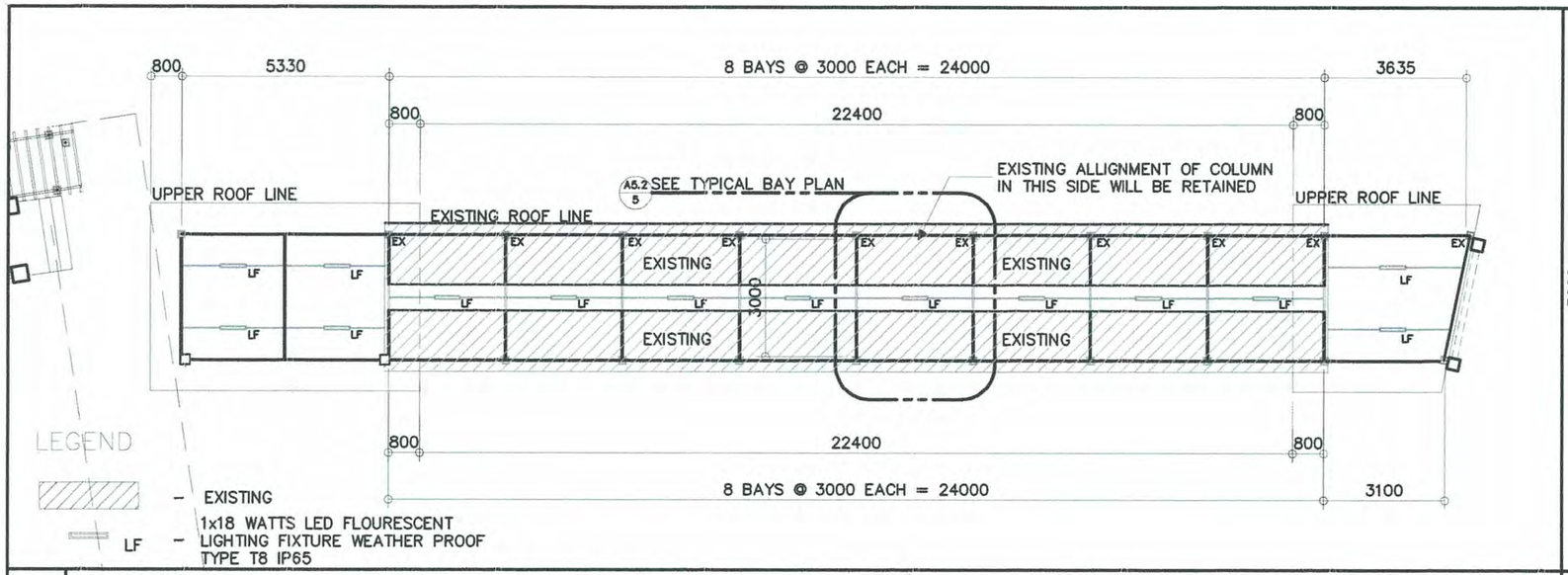

A3.1 REFLECTED CEILING PLAN (COVERED WALKWAY – 2)
SCALE 1:150 METERS

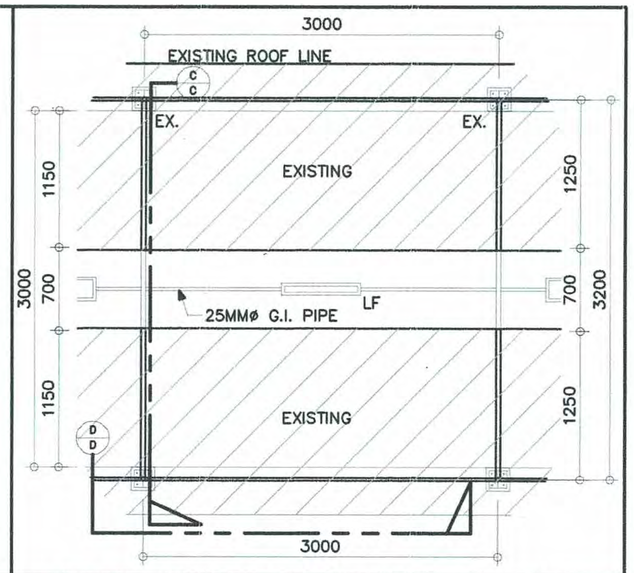

A3.2 BLOW-UP PLAN (COVERED WALKWAY – 2)
SCALE 1:50 METERS

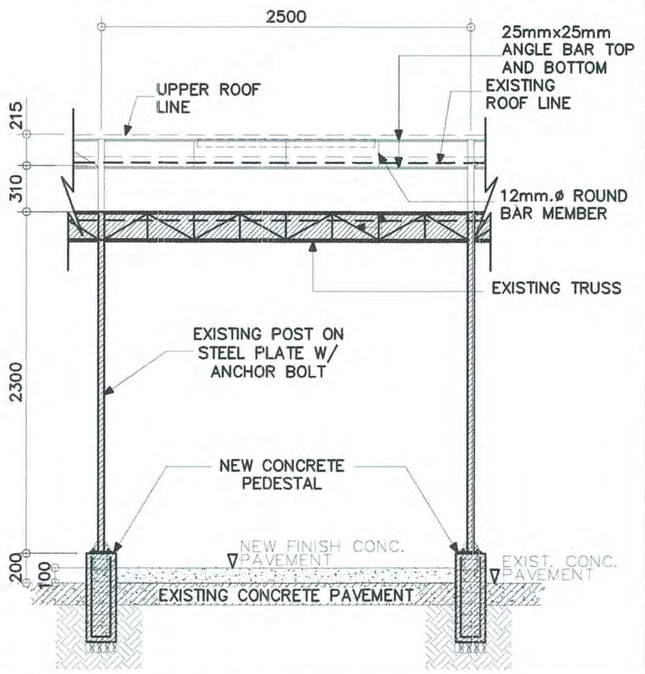

A3.3 SECTION D–D (COVERED WALKWAY – 2)
SCALE 1:40 METERS

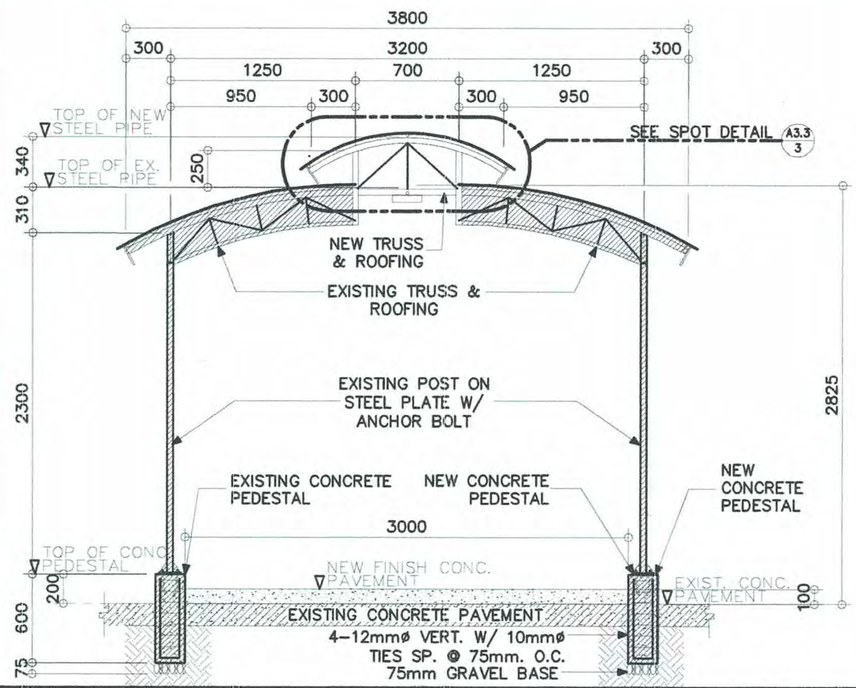

A3.4 SECTION C–C (COVERED WALKWAY – 2)
SCALE 1:40 METERS

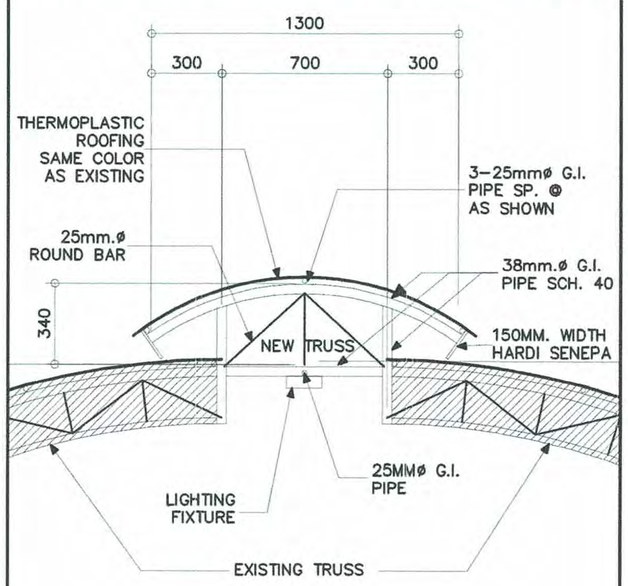

NOTE: REPLACE ALL DAMAGED/WORN–OUT THERMOPLASTIC ROOFS ON EXISTING ROOFINGS IF NECESSARY

A3.5 SPOT DETAIL
SCALE 1:25 METERS

PHILIPPINE PORTS AUTHORITY PMO DAVAO	PREPARED BY: KENNETH JOHN B. REMOLADOR, ARCHITECT II	CHECKED AND REVIEWED BY: EDELPETER L. DE LA ROSA, SUPERVISING ENGINEER	RECOMMENDING APPROVAL BY: LARA SIMONE L. ABA, ACTING ESD MANAGER	APROVED BY: ANALEE G. AGUILA, PORT MANAGER	OWNER: ANALEE G. AGUILA, PORT MANAGER	PROJECT TITLE: MAINTENANCE OF COVERED WALKWAY – 2 AT PASSENGER TERMINAL BUILDING AT SASA PORT, DAVAO CITY	REVISIONS: DATE / REMARKS / ADDENDUM
					SHEET CONTENTS: REFLECTED CEILING PLAN (CW – 2), BLOW-UP PLAN (CW – 2), SECTION C–C (CW – 2), SECTION D–D (CW – 2), SPOT DETAIL	LOCATION: SASA PORT, KM. 10 PORT AREA, DAVAO CITY	NO. – / PROJECT – / DATE – / DRAWN –

SHEET NO. A3 OF 4
CADD BY KJR
DATE DRAWN 1/12/26
DATE UPDATED MM/DD/YY

DRAWING AND SPECIFICATION DULY SIGNED, STAMPED OR SEALED AS INSTRUMENTS OF SERVICES ARE THE PROPERTY OF THE ARCHITECT, WHETHER THE OBJECTS FOR WHICH THEY ARE MADE IS EXECUTED OR NOT. IT SHALL BE UNLAWFUL FOR ANY PERSON WITHOUT THE WRITTEN CONSENT OF THE ARCHITECT OF THE SAID DOCUMENTS TO DUPLICATE OR TO MAKE COPIES OF THE SAID DOCUMENTS FOR USE IN REPETITION OF AND FOR PROJECTS OR BUILDINGS WHETHER PARTLY OR WHOLELY EXECUTED. R.A.545 SECTION 25(4).

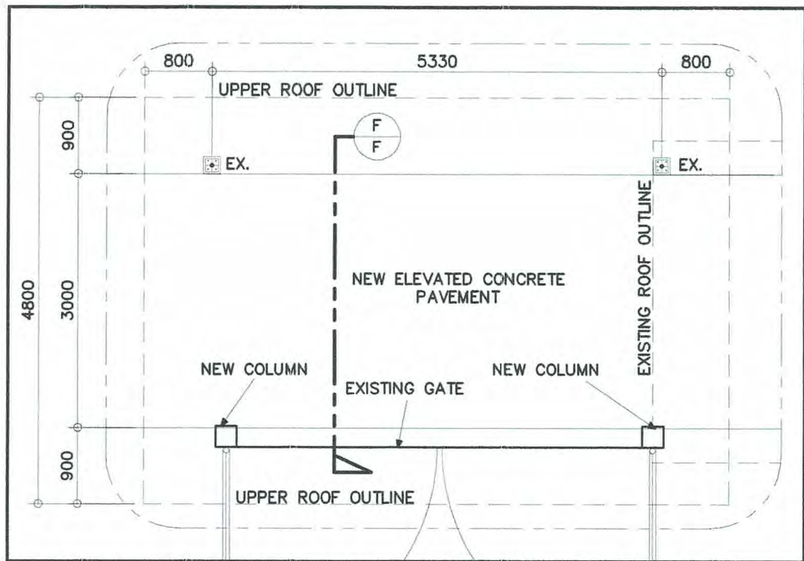

A4.1 UPPER ROOF BLOW-UP PLAN (COVERED WALKWAY – 2)
SCALE 1: 70 METERS

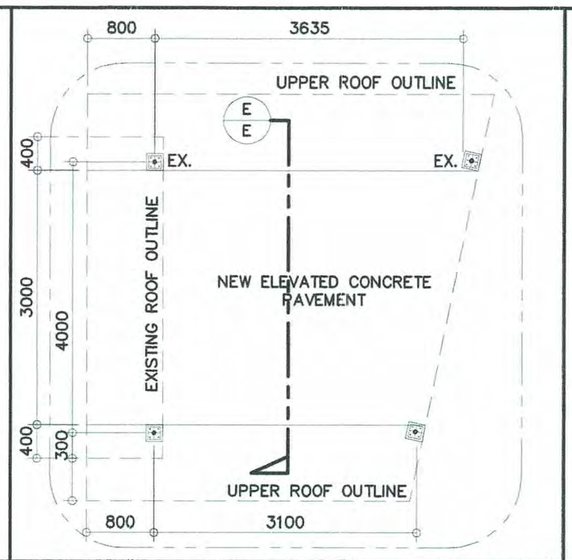

A4.2 BLOW-UP PLAN (COVERED WALKWAY – 2)
SCALE 1: 70 METERS

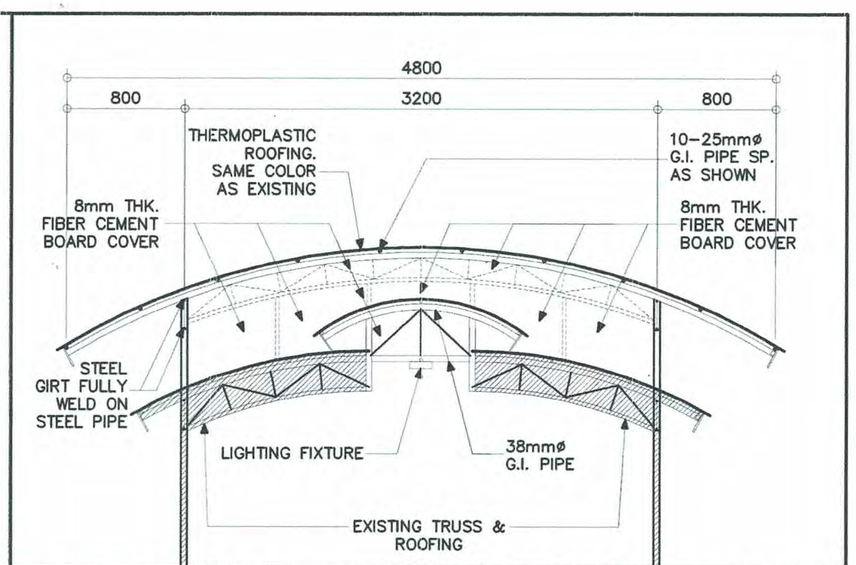

A4.5 COVERED WALKWAY UPPER COVER DETAIL (COVERED WALKWAY – 2)
SCALE 1: 40 METERS

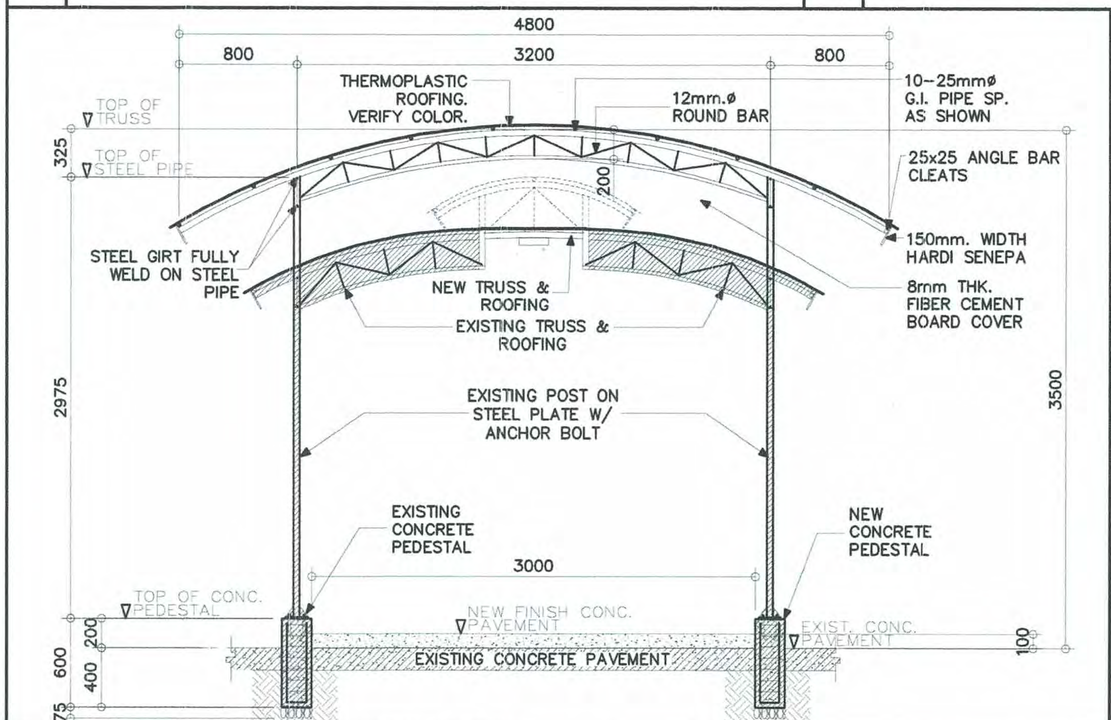

A4.3 SECTION E–E (COVERED WALKWAY – 2)
SCALE 1: 40 METERS

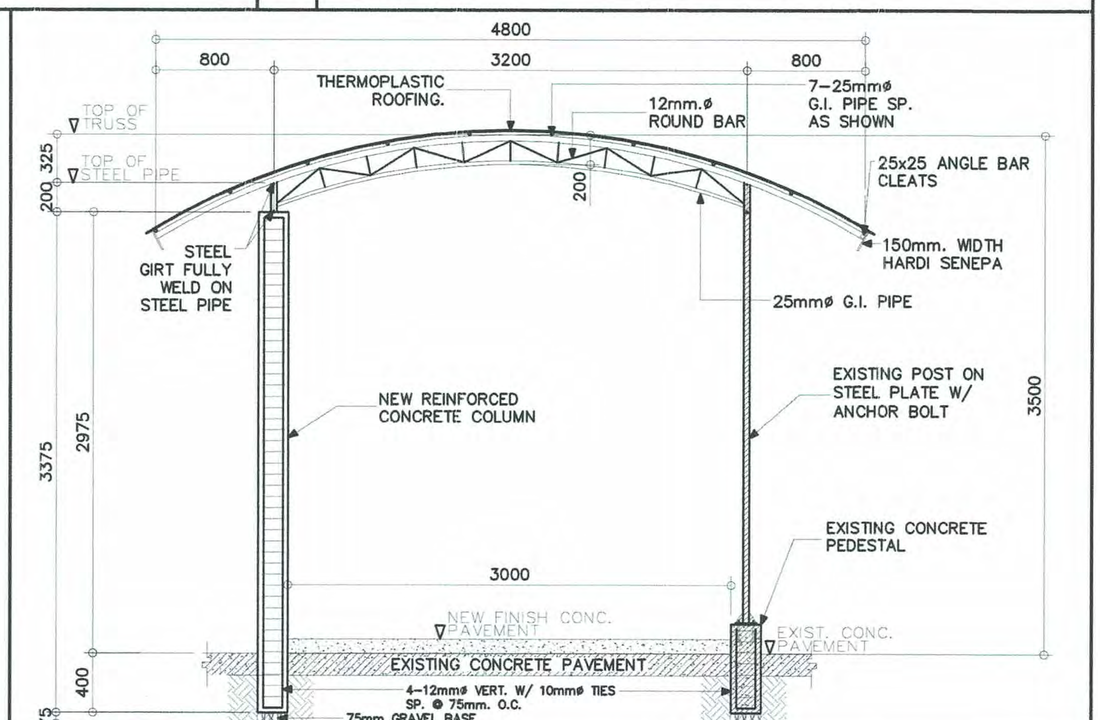

A4.4 SECTION F–F (COVERED WALKWAY – 2)
SCALE 1: 40 METERS

PHILIPPINE PORTS AUTHORITY
PMO DAVAO

PREPARED BY:	CHECKED AND REVIEWED BY:	RECOMMENDING APPROVAL BY:	APPROVED BY:
KENNETH JOHN B. REMOLADOR *ARCHITECT II*	EDELPETER L. DE LA ROSA *SUPERVISING ENGINEER*	LARA SIMONE L. ABA *ACTING ESD MANAGER*	ANALEE G. AGUILA *PORT MANAGER*

OWNER: ANALEE G. AGUILA, *PORT MANAGER*

SHEET CONTENTS: BLOW-UP PLANS (CW – 2), SECTION E–E (CW –2), SECTION F–F (CW –2), COVERED WALKWAY – 2 UPPER COVER DETAIL

PROJECT TITLE: MAINTENANCE OF COVERED WALKWAY – 2 AT PASSENGER TERMINAL BUILDING AT SASA PORT, DAVAO CITY

LOCATION: SASA PORT, KM. 10 PORT AREA, DAVAO CITY

REVISIONS	
DATE	REMARKS
ADDENDUM	
NO.	–
PROJECT	–
DATE	–
DRAWN	–

SHEET NO. A4 OF 4

CADD BY: KJR
DATE DRAWN: 1/12/26
DATE UPDATED: MM/DD/YY

DRAWING AND SPECIFICATION DULY SIGNED, STAMPED OR SEALED AS INSTRUMENTS OF SERVICES ARE THE PROPERTY OF THE ARCHITECT, WHETHER THE OBJECTS FOR WHICH THEY ARE MADE IS EXECUTED OR NOT. IT SHALL BE UNLAWFUL FOR ANY PERSON WITHOUT THE WRITTEN CONSENT OF THE ARCHITECT OF THE SAID DOCUMENTS TO DUPLICATE OR TO MAKE COPIES OF THE SAID DOCUMENTS FOR USE IN REPETITION OF AND FOR PROJECTS OR BUILDINGS WHETHER PARTLY OR WHOLELY EXECUTED. R.A.545 SECTION 25(4).

LEGEND

LF – 1x18 WATTS LED FLOURESCENT LIGHTING FIXTURE WEATHER PROOF TYPE T8 IP65

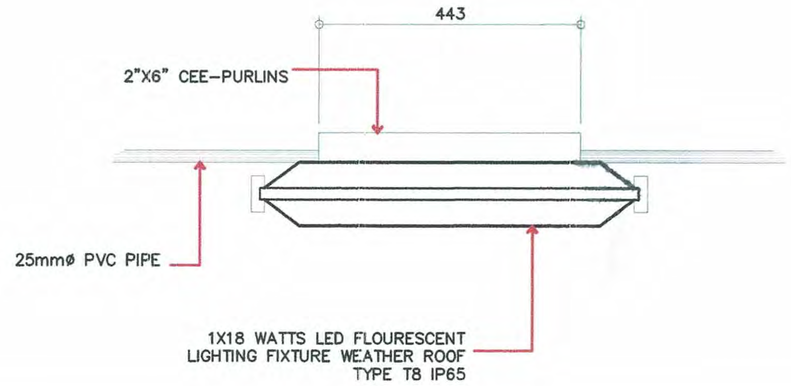

E1.2 LIGHT FIXTURE ATTACHMENT DETAIL

SCALE 1: 10 METERS

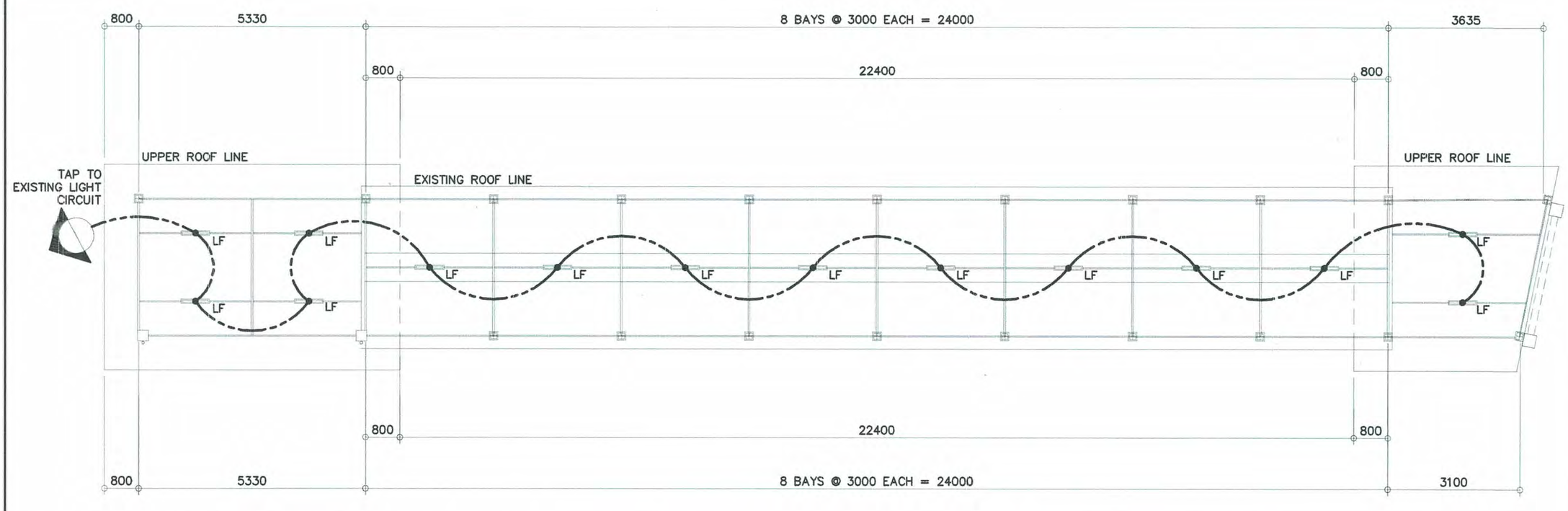

E1.1 LIGHTING LAYOUT (COVERED WALKWAY – 2)

SCALE 1: 40 METERS

PHILIPPINE PORTS AUTHORITY PMO DAVAO	PREPARED BY: KENNETH JOHN B. REMOLADOR, ARCHITECT II	CHECKED AND REVIEWED BY: EDELPETER L. DE LA ROSA, SUPERVISING ENGINEER	RECOMMENDING APPROVAL BY: LARA SIMONE L. ABA, ACTING ESD MANAGER	APROVED BY: ANALEE G. AGUILA, PORT MANAGER	OWNER: ANALEE G. AGUILA, PORT MANAGER	PROJECT TITLE: MAINTENANCE OF COVERED WALKWAY – 2 AT PASSENGER TERMINAL BUILDING AT SASA PORT, DAVAO CITY	REVISIONS: DATE / REMARKS
					SHEET CONTENTS: LIGHTING LAYOUT (CW – 2), LIGHT FIXTURE ATTACHMENT DETAIL	LOCATION: SASA PORT, KM. 10 PORT AREA, DAVAO CITY	ADDENDUM: NO. – / PROJECT – / DATE – / DRAWN –
							SHEET NO. E1 OF 1 / CADD BY KJR / DATE DRAWN 1/12/26 / DATE UPDATED MM/DD/YY

DRAWING AND SPECIFICATION DULY SIGNED, STAMPED OR SEALED AS INSTRUMENTS OF SERVICES ARE THE PROPERTY OF THE ARCHITECT, WHETHER THE OBJECTS FOR WHICH THEY ARE MADE IS EXECUTED OR NOT. IT SHALL BE UNLAWFUL FOR ANY PERSON WITHOUT THE WRITTEN CONSENT OF THE ARCHITECT OF THE SAID DOCUMENTS TO DUPLICATE OR TO MAKE COPIES OF THE SAID DOCUMENTS FOR USE IN REPETITION OF AND FOR PROJECTS OR BUILDINGS WHETHER PARTLY OR WHOLELY EXECUTED. R.A.545 SECTION 25(4).